Storm Drain Notes:

1. Storm drain pipe installed more than (5) five feet from any building shall be PVC pipe conforming to ASTM D3034–SDR 35. 36" detention pipe shall be aluminized steel spiral pipe, conforming to AASHTO M36 (0.109" thick [gauge 12]. 2–2/3" x 1/2" or 3" x 1" corrugations), or other type of pipe acceptable to the design engineer and the County Branch storm drain lines shall enter mains through wye type fittings.
   Pipe within 5 feet of the building shall be ABS or other Pipe type permitted by OSPSC
2. Cleanouts to be the same material as pipe. Cleanouts in paved areas are to have an iron frame and cover.
3. Pipe backfill in all pipe zone areas is to be 3/4"–0" crushed rock. Trench backfill in areas to be paved to have full depth rock backfill.
4. Fill under paved areas is to have full depth rock backfill. Fill is to be compacted to 95% dry density per AASHTO T–99 test method. Check subgrade compaction with loaded truck prior to placing base rock on site. Soft or spongy areas are to be removed and recompacted.
5. Storm drain lines are to conform to materials, installation and testing requirements as may be required by the County and Oregon State Plumbing Specialty Code.

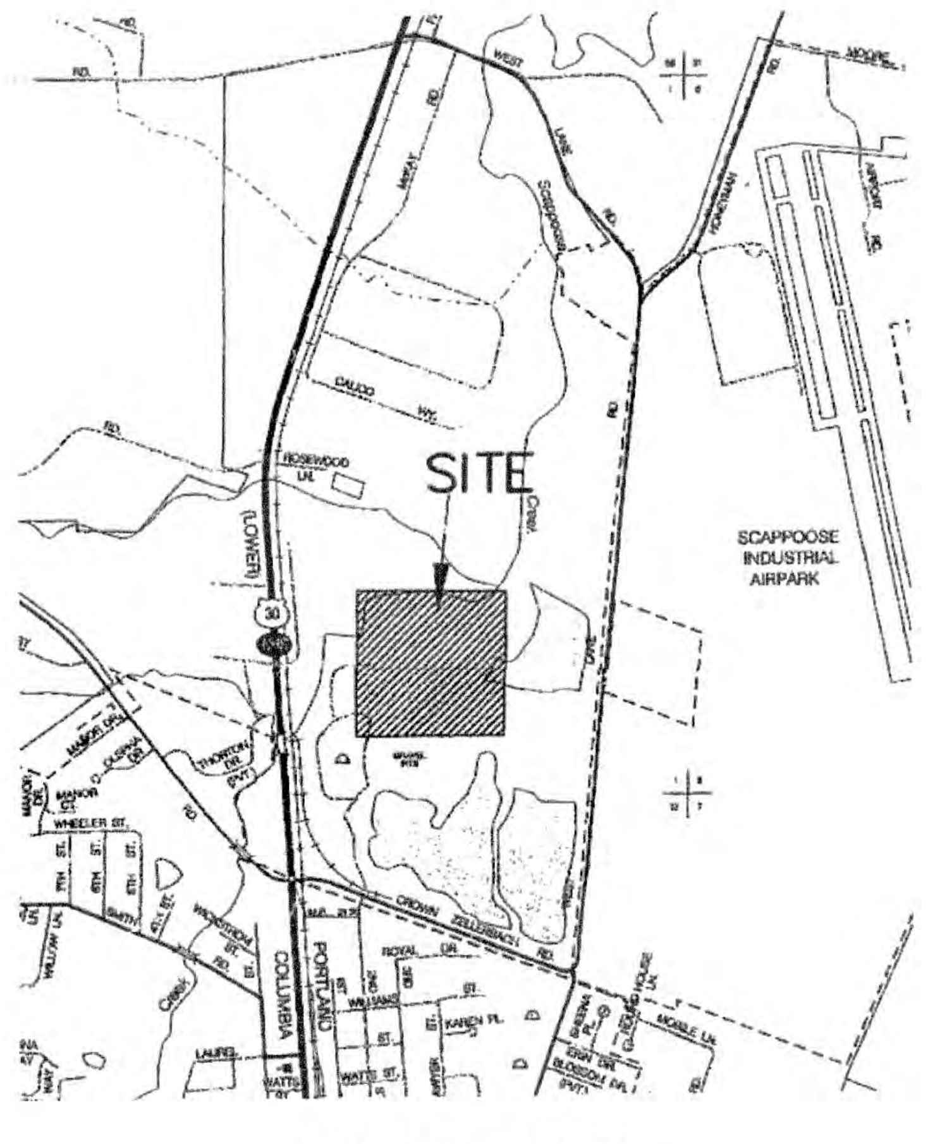
SITE
SCAPPOOSE INDUSTRIAL AIRPARK
COLUMBIA

VICINITY MAP
(NTS)

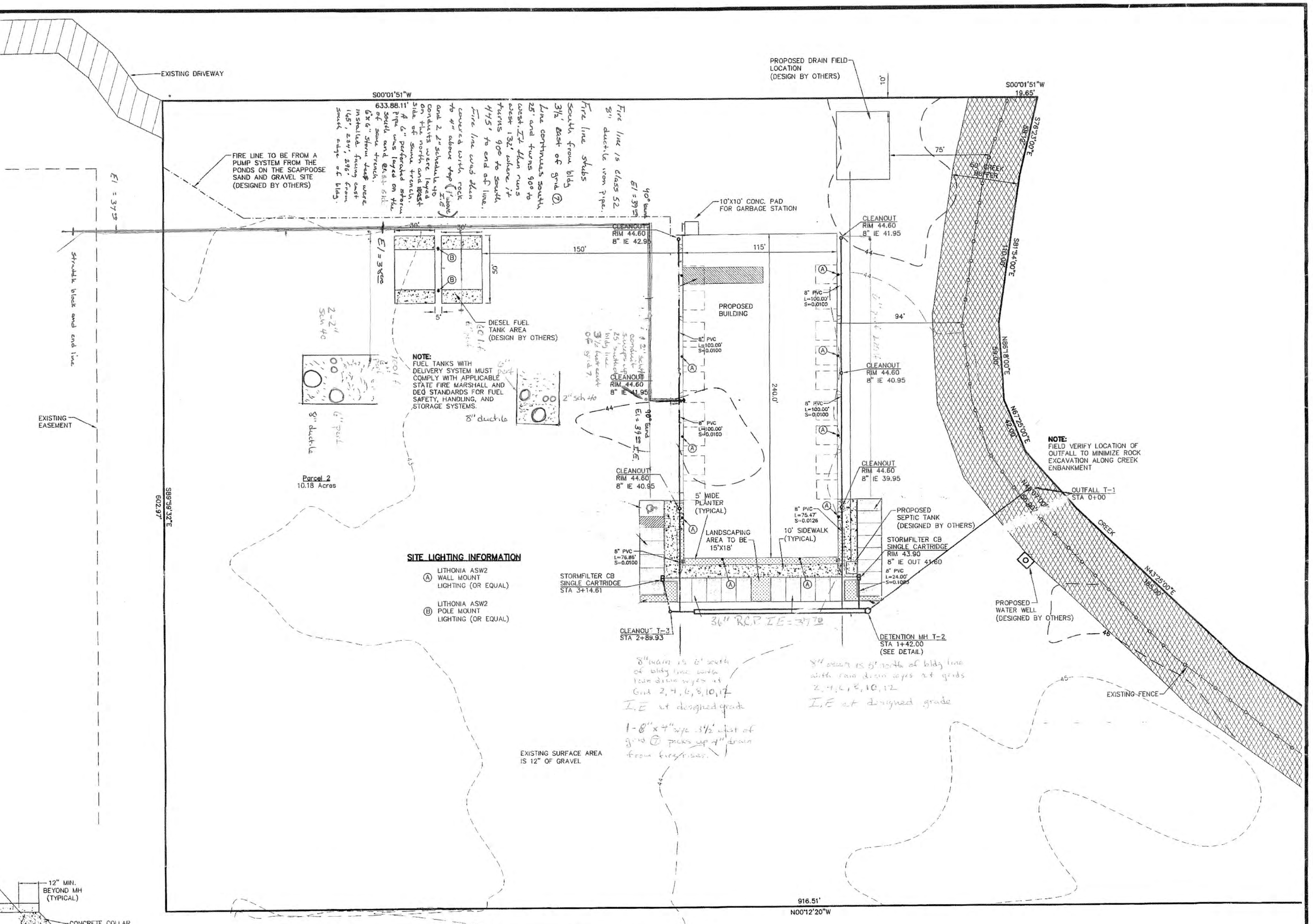
EXISTING DRIVEWAY
S00°01'51"W
633.88.11'
FIRE LINE TO BE FROM A PUMP SYSTEM FROM THE PONDS ON THE SCAPPOOSE SAND AND GRAVEL SITE (DESIGNED BY OTHERS)
EXISTING EASEMENT
S89°59'32"E
602.97'
Parcel 2
10.18 Acres
30'
30'
50'
5'
DIESEL FUEL TANK AREA (DESIGN BY OTHERS)
150'
115'
240.0'
94'
75'
10'
CLEANOUT
RIM 44.60
8" IE 42.95
CLEANOUT
RIM 44.60
8" IE 41.95
CLEANOUT
RIM 44.60
8" IE 40.95
CLEANOUT
RIM 44.60
8" IE 40.95
CLEANOUT
RIM 44.60
8" IE 39.95
10'X10' CONC. PAD FOR GARBAGE STATION
PROPOSED BUILDING
8" PVC L=100.00' S=0.0100
8" PVC L=100.00' S=0.0100
8" PVC L=100.00' S=0.0100
8" PVC L=100.00' S=0.0100
8" PVC L=75.47' S=0.0126
8" PVC L=76.86' S=0.0100
8" PVC L=24.00' S=0.1083
5' WIDE PLANTER (TYPICAL)
LANDSCAPING AREA TO BE 15'X18'
10' SIDEWALK (TYPICAL)
PROPOSED SEPTIC TANK (DESIGNED BY OTHERS)
STORMFILTER CB SINGLE CARTRIDGE RIM 43.90 8" IE OUT 41.60
STORMFILTER CB SINGLE CARTRIDGE STA 3+14.61
CLEANOUT T–3 STA 2+89.93
DETENTION MH T–2 STA 1+42.00 (SEE DETAIL)
PROPOSED DRAIN FIELD LOCATION (DESIGN BY OTHERS)
S00°01'51"W
19.65'
60' CREEK BUFFER
S76°23'00"E 58.12'
S81°54'00"E 140.00'
N86°18'00"E 59.00'
N67°25'00"E 42.00'
N48°07'00" 56.00'
N43°25'00"E 185.00'
CREEK
OUTFALL T–1 STA 0+00
PROPOSED WATER WELL (DESIGNED BY OTHERS)
EXISTING FENCE
EXISTING SURFACE AREA IS 12" OF GRAVEL
916.51'
N00°12'20"W
43
44
45
46
A
B

NOTE:
FUEL TANKS WITH DELIVERY SYSTEM MUST COMPLY WITH APPLICABLE STATE FIRE MARSHALL AND DEQ STANDARDS FOR FUEL SAFETY, HANDLING, AND STORAGE SYSTEMS.

NOTE:
FIELD VERIFY LOCATION OF OUTFALL TO MINIMIZE ROCK EXCAVATION ALONG CREEK ENBANKMENT

SITE LIGHTING INFORMATION

Ⓐ LITHONIA ASW2 WALL MOUNT LIGHTING (OR EQUAL)

Ⓑ LITHONIA ASW2 POLE MOUNT LIGHTING (OR EQUAL)

Fire line is class 52 8" ductile iron pipe.
Fire line stubs South from bldg 3½' East of grid ⑦.
Line continues South 25' and turns 90° to west. It then runs west 132' where it turns 90° to South 445' to end of line.
Fire line was then covered with rock to 4" above top (1' above I.E)
and 2 2" schedule 40 conduits were layed on the north and west side of same trench.
A 6" perforated storm pipe was layed on the south and east side of same trench.
6"x6" Storm tees were installed facing east 165', 234', 296' from south edge of bldg.

40° bend
El = 39.59
El = 38.50
El = 37.9
Straddle block and end line.
2-2" Sch 40
6" perf
8" ductile
6" perf
300 l.f.
60 l.f.
6" perf
2" sch 40
8" ductile
2 2" sch 40 conduit stubs up 25' south of bldg line 3½ feet east of grid 7.
90° bend
El = 39.50 I.E.

36" RCP I.E = 37.70

8" main is 6' south of bldg line with rain drain wyes at Grid 2, 4, 6, 8, 10, 12
I.E at designed grade

8" main is 5' north of bldg line with rain drain wyes at grids 2, 4, 6, 8, 10, 12
I.E at designed grade

1 - 8" x 4" wye 3½' east of grid ⑦ picks up 4" drain from fire/riser.

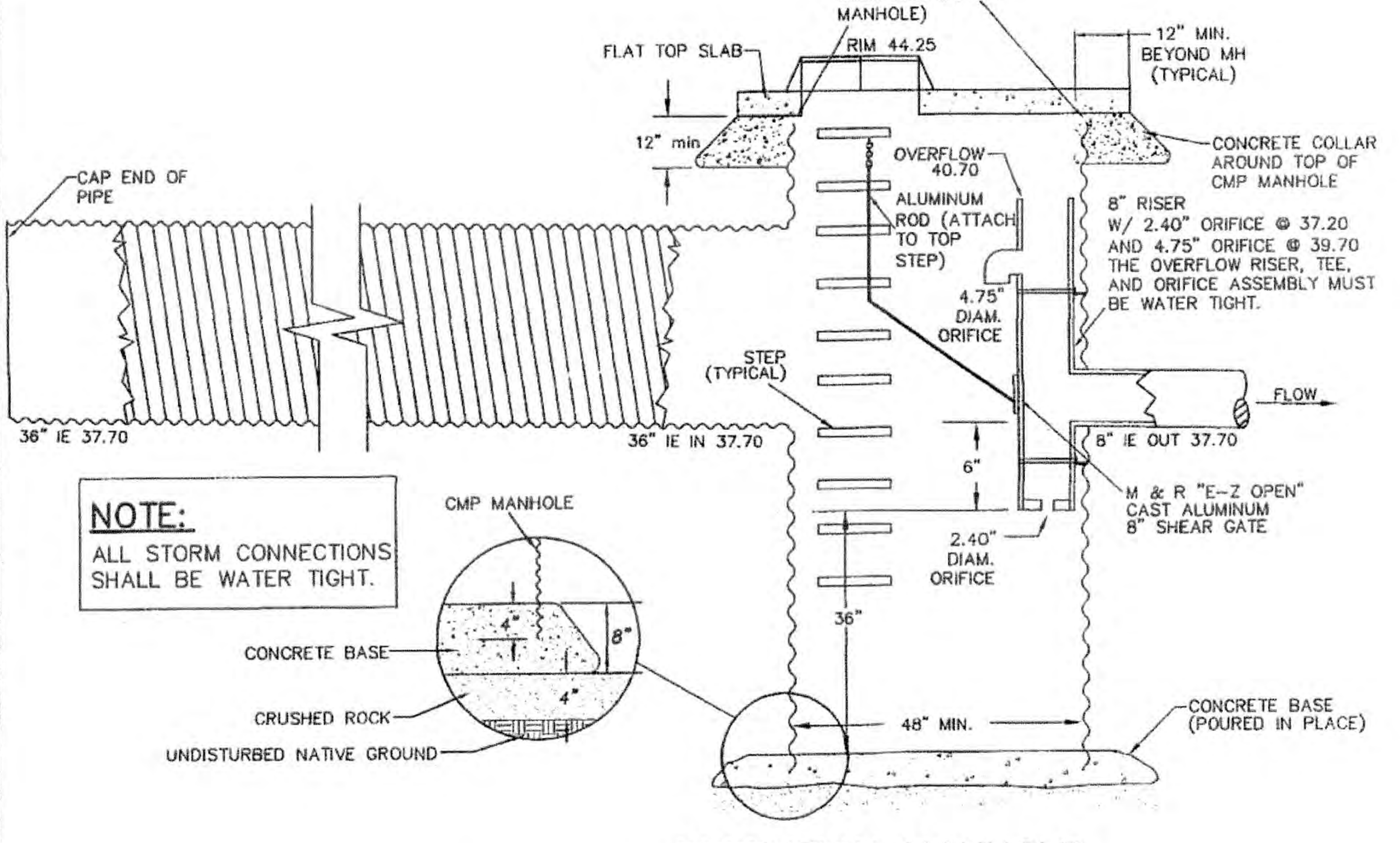
GAP (FLAT TOP DOES NOT SIT ON MANHOLE)
FLAT TOP SLAB
RIM 44.25
12" MIN. BEYOND MH (TYPICAL)
12" min
CONCRETE COLLAR AROUND TOP OF CMP MANHOLE
CAP END OF PIPE
OVERFLOW 40.70
ALUMINUM ROD (ATTACH TO TOP STEP)
8" RISER W/ 2.40" ORIFICE @ 37.20 AND 4.75" ORIFICE @ 39.70 THE OVERFLOW RISER, TEE, AND ORIFICE ASSEMBLY MUST BE WATER TIGHT.
4.75" DIAM. ORIFICE
STEP (TYPICAL)
FLOW
36" IE 37.70
36" IE IN 37.70
8" IE OUT 37.70
6"
M & R "E–Z OPEN" CAST ALUMINUM 8" SHEAR GATE
2.40" DIAM. ORIFICE
36"
CMP MANHOLE
4"
8"
4"
CONCRETE BASE
CRUSHED ROCK
UNDISTURBED NATIVE GROUND
48" MIN.
CONCRETE BASE (POURED IN PLACE)

NOTE:
ALL STORM CONNECTIONS SHALL BE WATER TIGHT.

DETENTION MANHOLE
(NTS)

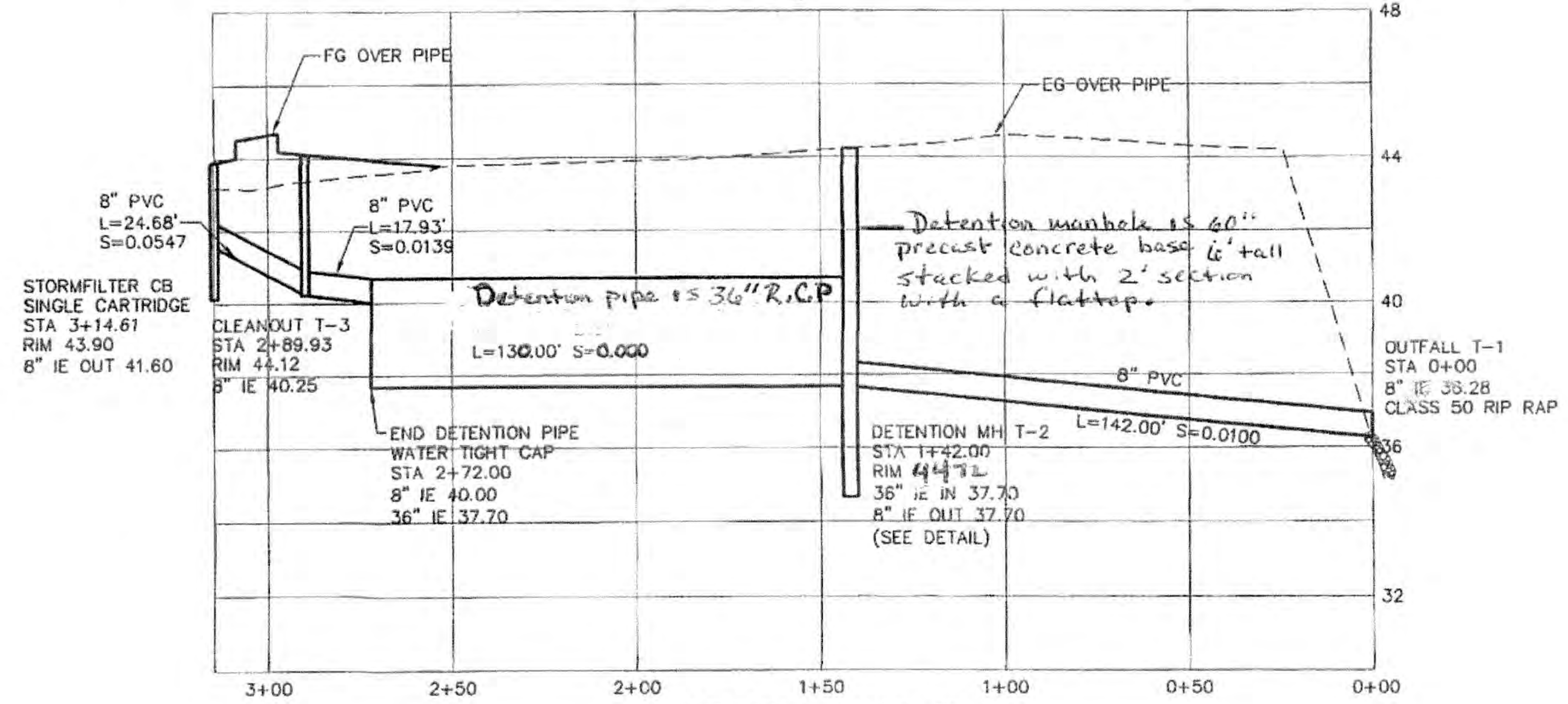
FG OVER PIPE
EG OVER PIPE
8" PVC L=24.68' S=0.0547
8" PVC L=17.93' S=0.0139
STORMFILTER CB SINGLE CARTRIDGE STA 3+14.61 RIM 43.90 8" IE OUT 41.60
CLEANOUT T–3 STA 2+89.93 RIM 44.12 8" IE 40.25
L=130.00' S=0.000
END DETENTION PIPE WATER TIGHT CAP STA 2+72.00 8" IE 40.00 36" IE 37.70
DETENTION MH T–2 STA 1+42.00 RIM 44.72 36" IE IN 37.70 8" IE OUT 37.70 (SEE DETAIL)
8" PVC
L=142.00' S=0.0100
OUTFALL T–1 STA 0+00 8" IE 36.28 CLASS 50 RIP RAP
48
44
40
36
32
3+00
2+50
2+00
1+50
1+00
0+50
0+00

Detention pipe is 36" R.C.P

Detention manhole is 60" precast concrete base 6' tall stacked with 2' section with a flattop.

STORM LINE T
SCALE: HORIZ. 1"=40'
VERT. 1"=4'

RECEIVED
MAR 0 5 2008
Land Development Services

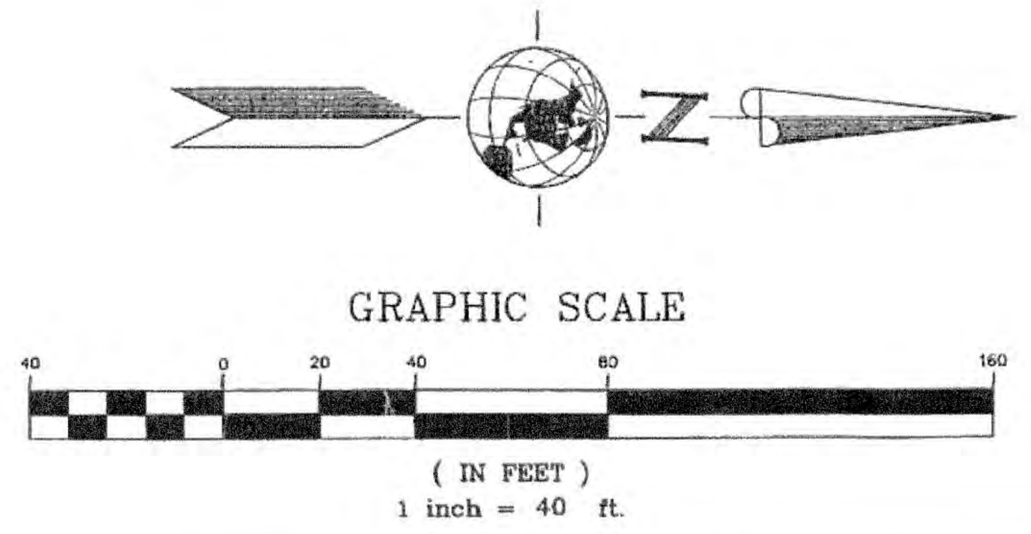
N
GRAPHIC SCALE
40
0
20
40
80
160

(IN FEET)
1 inch = 40 ft.

THOMAS J. SISUL
12,820
OREGON
Feb. 14, 1985
Thomas Sisul
exp 6/30/08
3-5-08

REVISIONS	BY
REDLINES 3/04/08	MM

Scappoose Industrial Building

Hedges Creek Management #1, LLC

Site and Storm Drain Plan

SISUL ENGINEERING
375 PORTLAND AVENUE
GLADSTONE, OREGON 97027
(503) 657–0188
DRAWING 07–088STORM.DWG

DATE FEB 2008
SCALE 1"=40'
DRAWN MM
JOB SGL 07-088
SHEET CE1
OF 3 SHEETS

Storm Drain Notes:

1. Storm drain pipe installed more than (5) five feet from any building shall be PVC pipe conforming to ASTM D3034–SDR 35. 36" detention pipe shall be aluminized steel spiral pipe, conforming to AASHTO M36 (0.109" thick [gauge 12], 2–2/3" x 1/2" or 3" x 1" corrugations), or other type of pipe acceptable to the design engineer and the County Branch storm drain lines shall enter mains through wye type fittings.
   Pipe within 5 feet of the building shall be ABS or other Pipe type permitted by OSPSC
2. Cleanouts to be the same material as pipe. Cleanouts in paved areas are to have an iron frame and cover.
3. Pipe backfill in all pipe zone areas is to be 3/4"–0" crushed rock. Trench backfill in areas to be paved to have full depth rock backfill.
4. Fill under paved areas is to have full depth rock backfill. Fill is to be compacted to 95% dry density per AASHTO T–99 test method. Check subgrade compaction with loaded truck prior to placing base rock on site. Soft or spongy areas are to be removed and recompacted.
5. Storm drain lines are to conform to materials, installation and testing requirements as may be required by the County and Oregon State Plumbing Specialty Code.

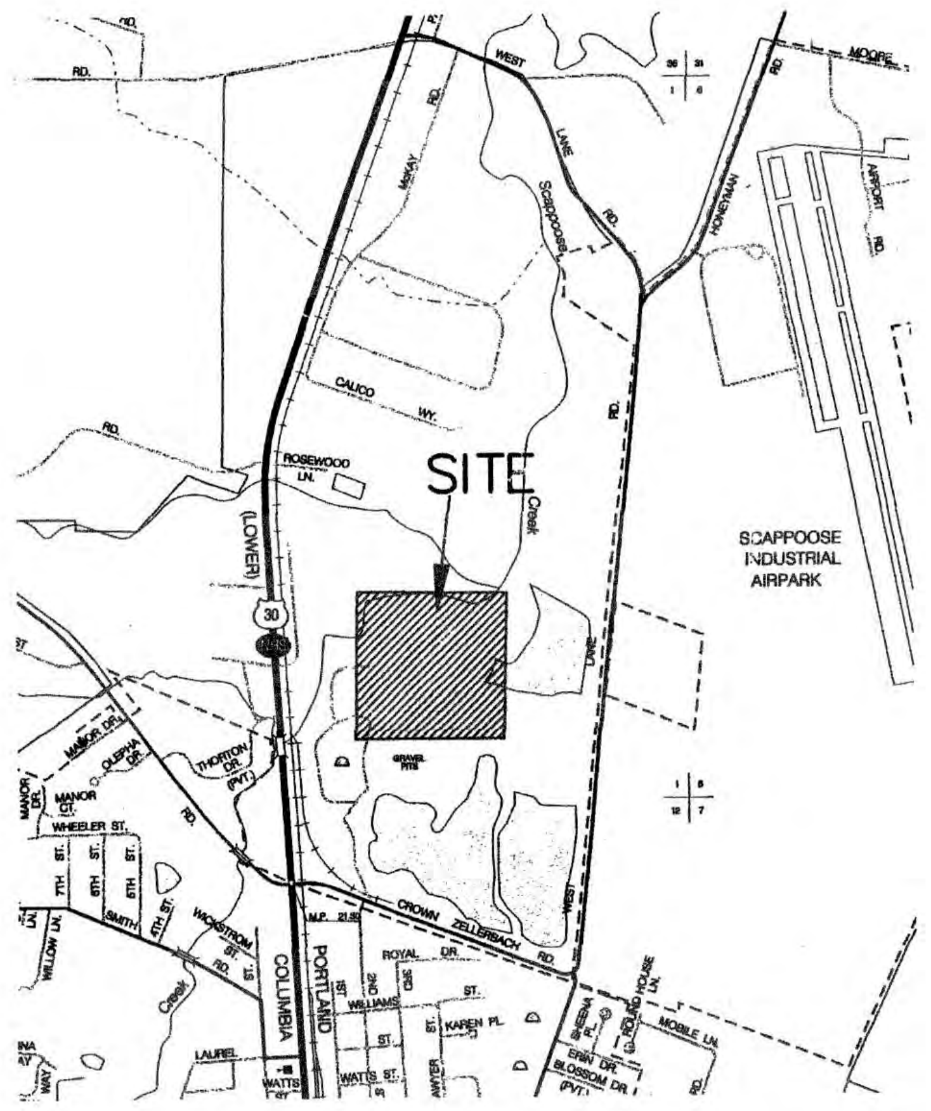
RD.
WEST
LANE
RD.
MOORE
HONEYMAN
AIRPORT RD.
McKAY RD.
SCAPPOOSE
CALICO WY.
ROSEWOOD LN.
SITE
Creek
(LOWER)
30
SCAPPOOSE INDUSTRIAL AIRPARK
GRAVEL PITS
MANOR DR.
OLEPHA DR.
THORTON DR. (PVT.)
MANOR CT.
WHEELER ST.
7TH ST.
6TH ST.
5TH ST.
4TH ST.
SMITH
WICKSTROM ST.
CROWN ZELLERBACH RD.
COLUMBIA
PORTLAND
ROYAL DR.
WILLIAMS ST.
KAREN PL
ROUND HOUSE LN.
SHEENA PL.
MOBILE LN.
ERIN DR.
BLOSSOM DR. (PVT.)
LAUREL
WATTS ST.
WILLOW LN.

VICINITY MAP

(NTS)

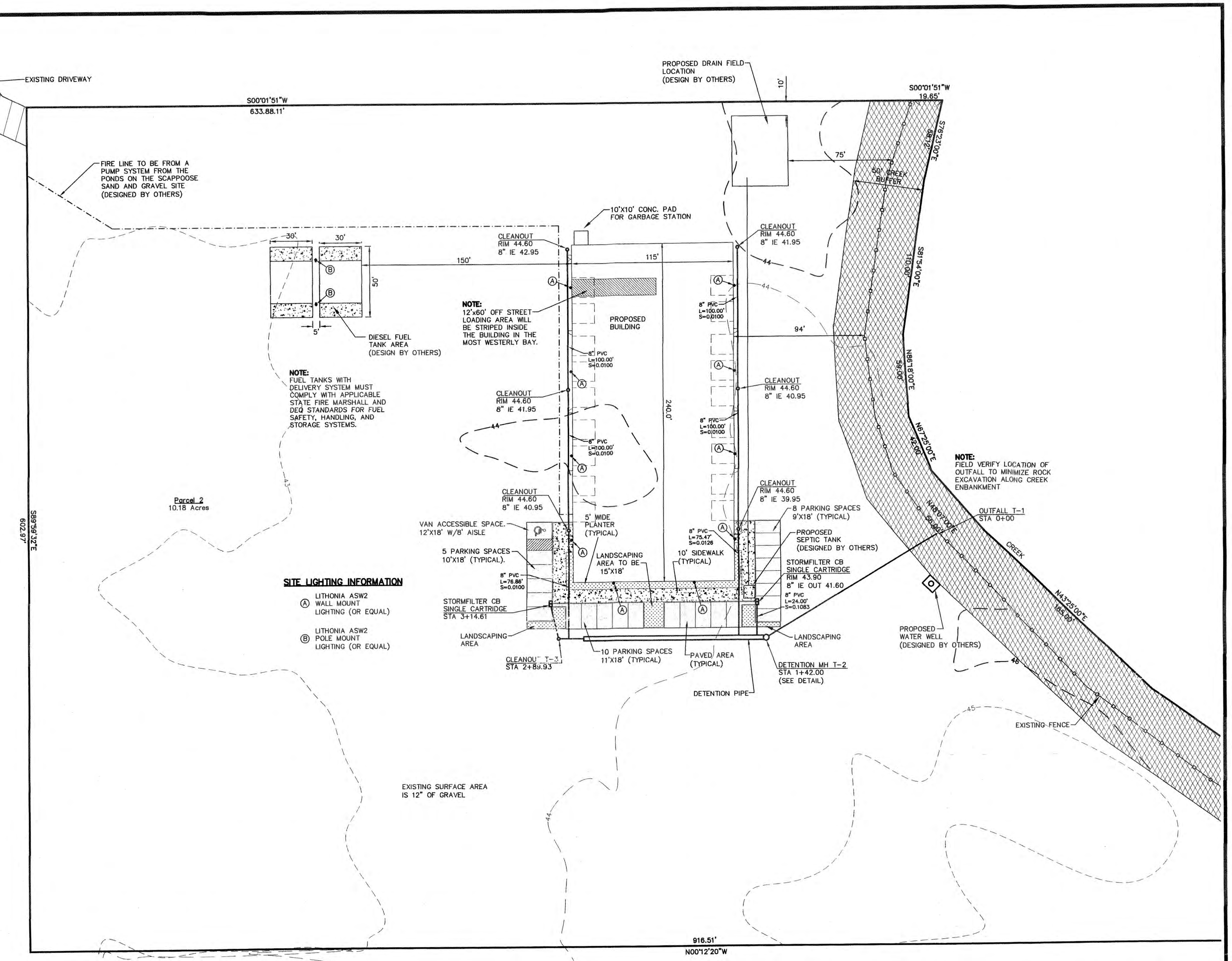
EXISTING DRIVEWAY
S00°01'51"W
633.88.11'
FIRE LINE TO BE FROM A PUMP SYSTEM FROM THE PONDS ON THE SCAPPOOSE SAND AND GRAVEL SITE (DESIGNED BY OTHERS)
30'
30'
50'
5'
150'
DIESEL FUEL TANK AREA (DESIGN BY OTHERS)
EXISTING EASEMENT
S89°59'32"E
602.97'
Parcel 2
10.18 Acres
43
44
45
46
10'X10' CONC. PAD FOR GARBAGE STATION
CLEANOUT RIM 44.60 8" IE 42.95
CLEANOUT RIM 44.60 8" IE 41.95
CLEANOUT RIM 44.60 8" IE 41.95
CLEANOUT RIM 44.60 8" IE 40.95
CLEANOUT RIM 44.60 8" IE 40.95
CLEANOUT RIM 44.60 8" IE 39.95
115'
240.0'
94'
75'
10'
PROPOSED BUILDING
8" PVC L=100.00' S=0.0100
8" PVC L=75.47' S=0.0126
8" PVC L=76.86' S=0.0100
8" PVC L=24.00' S=0.1083
VAN ACCESSIBLE SPACE. 12'X18' W/8' AISLE
5 PARKING SPACES 10'X18' (TYPICAL).
5' WIDE PLANTER (TYPICAL)
LANDSCAPING AREA TO BE 15'X18'
10' SIDEWALK (TYPICAL)
8 PARKING SPACES 9'X18' (TYPICAL)
PROPOSED SEPTIC TANK (DESIGNED BY OTHERS)
STORMFILTER CB SINGLE CARTRIDGE RIM 43.90 8" IE OUT 41.60
STORMFILTER CB SINGLE CARTRIDGE STA 3+14.61
LANDSCAPING AREA
LANDSCAPING AREA
CLEANOUT T–3 STA 2+89.93
10 PARKING SPACES 11'X18' (TYPICAL)
PAVED AREA (TYPICAL)
DETENTION MH T–2 STA 1+42.00 (SEE DETAIL)
DETENTION PIPE
PROPOSED DRAIN FIELD LOCATION (DESIGN BY OTHERS)
S00°01'51"W 19.65'
S76°23'00"E 58.12'
50' CREEK BUFFER
S81°54'00"E 110.00'
N86°18'00"E 59.00'
N67°25'00"E 42.00'
N48°07'00"E 56.00'
N43°25'00"E 165.00'
CREEK
OUTFALL T–1 STA 0+00
PROPOSED WATER WELL (DESIGNED BY OTHERS)
EXISTING FENCE
EXISTING SURFACE AREA IS 12" OF GRAVEL
916.51'
N00°12'20"W
A
B

NOTE:
12'x60' OFF STREET LOADING AREA WILL BE STRIPED INSIDE THE BUILDING IN THE MOST WESTERLY BAY.

NOTE:
FUEL TANKS WITH DELIVERY SYSTEM MUST COMPLY WITH APPLICABLE STATE FIRE MARSHALL AND DEQ STANDARDS FOR FUEL SAFETY, HANDLING, AND STORAGE SYSTEMS.

NOTE:
FIELD VERIFY LOCATION OF OUTFALL TO MINIMIZE ROCK EXCAVATION ALONG CREEK ENBANKMENT

SITE LIGHTING INFORMATION

Ⓐ LITHONIA ASW2 WALL MOUNT LIGHTING (OR EQUAL)

Ⓑ LITHONIA ASW2 POLE MOUNT LIGHTING (OR EQUAL)

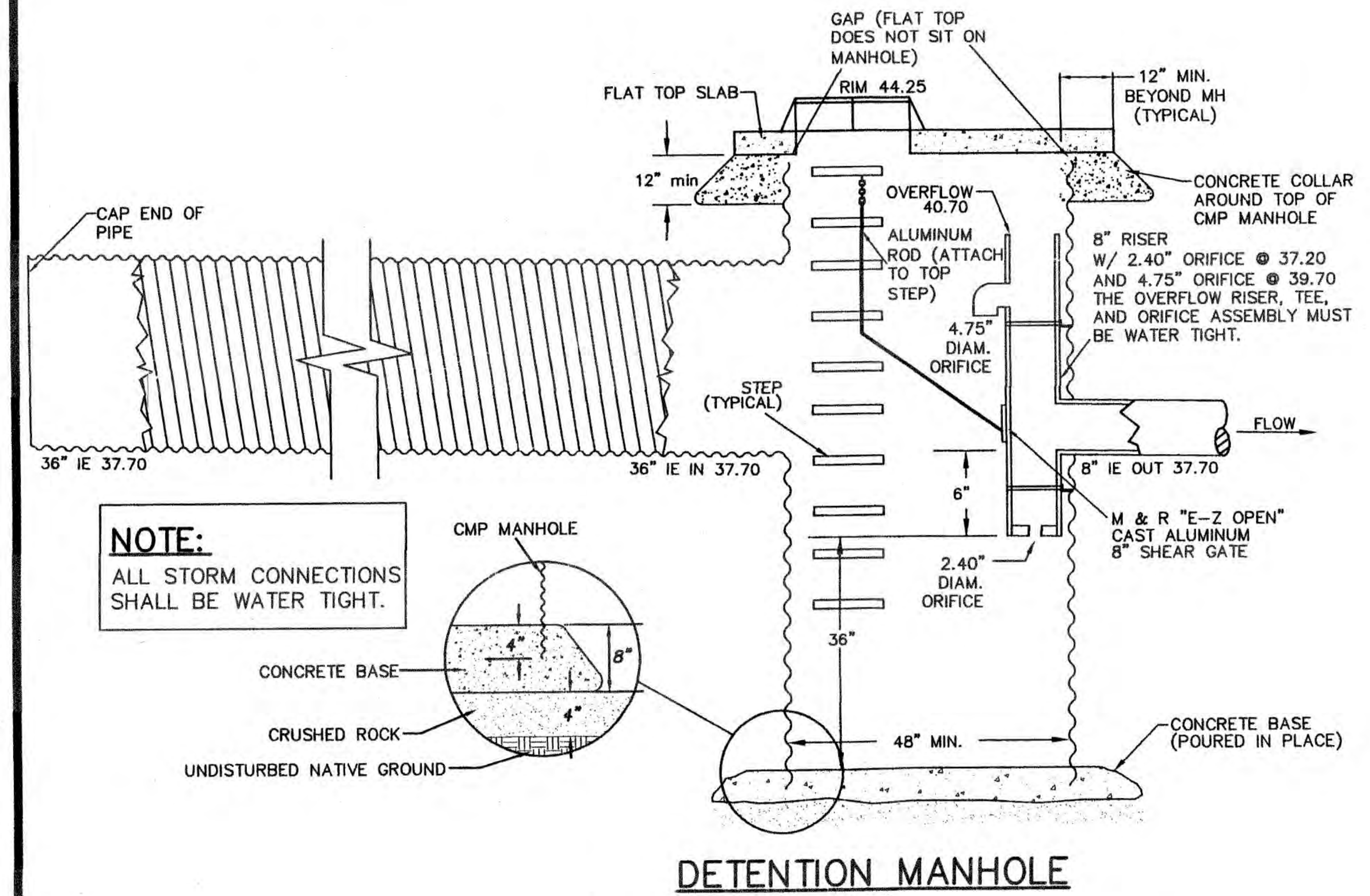
GAP (FLAT TOP DOES NOT SIT ON MANHOLE)
FLAT TOP SLAB
RIM 44.25
12" MIN. BEYOND MH (TYPICAL)
12" min
CONCRETE COLLAR AROUND TOP OF CMP MANHOLE
CAP END OF PIPE
OVERFLOW 40.70
ALUMINUM ROD (ATTACH TO TOP STEP)
8" RISER W/ 2.40" ORIFICE @ 37.20 AND 4.75" ORIFICE @ 39.70 THE OVERFLOW RISER, TEE, AND ORIFICE ASSEMBLY MUST BE WATER TIGHT.
4.75" DIAM. ORIFICE
STEP (TYPICAL)
FLOW
36" IE 37.70
36" IE IN 37.70
8" IE OUT 37.70
6"
M & R "E–Z OPEN" CAST ALUMINUM 8" SHEAR GATE
2.40" DIAM. ORIFICE
CMP MANHOLE
36"
CONCRETE BASE
4"
8"
4"
CRUSHED ROCK
UNDISTURBED NATIVE GROUND
48" MIN.
CONCRETE BASE (POURED IN PLACE)

NOTE:
ALL STORM CONNECTIONS SHALL BE WATER TIGHT.

DETENTION MANHOLE

(NTS)

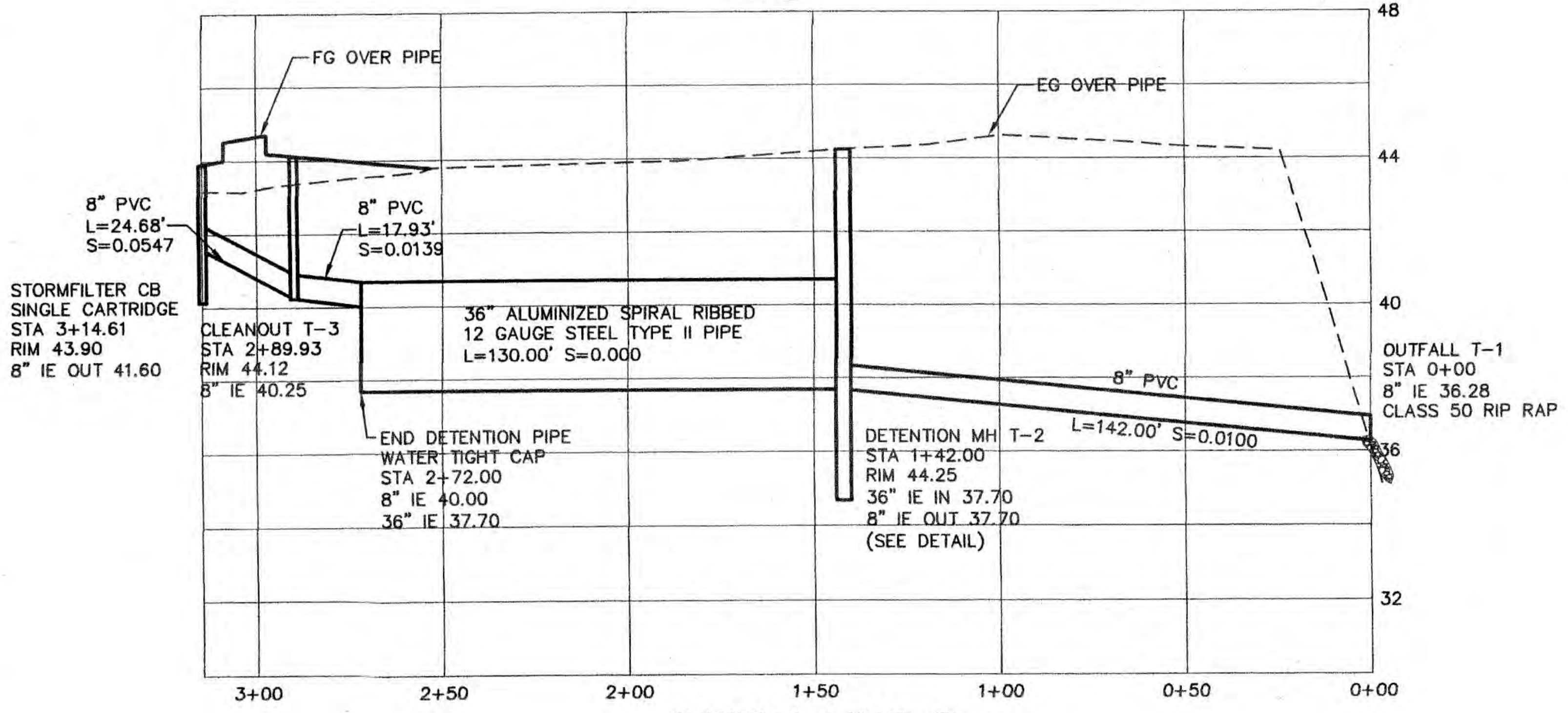
FG OVER PIPE
EG OVER PIPE
8" PVC L=24.68' S=0.0547
8" PVC L=17.93' S=0.0139
STORMFILTER CB SINGLE CARTRIDGE STA 3+14.61 RIM 43.90 8" IE OUT 41.60
CLEANOUT T–3 STA 2+89.93 RIM 44.12 8" IE 40.25
36" ALUMINIZED SPIRAL RIBBED 12 GAUGE STEEL TYPE II PIPE L=130.00' S=0.000
END DETENTION PIPE WATER TIGHT CAP STA 2+72.00 8" IE 40.00 36" IE 37.70
DETENTION MH T–2 STA 1+42.00 RIM 44.25 36" IE IN 37.70 8" IE OUT 37.70 (SEE DETAIL)
8" PVC
L=142.00' S=0.0100
OUTFALL T–1 STA 0+00 8" IE 36.28 CLASS 50 RIP RAP
48
44
40
36
32
3+00
2+50
2+00
1+50
1+00
0+50
0+00

STORM LINE T

SCALE: HORIZ. 1"=40'
VERT. 1"=4'

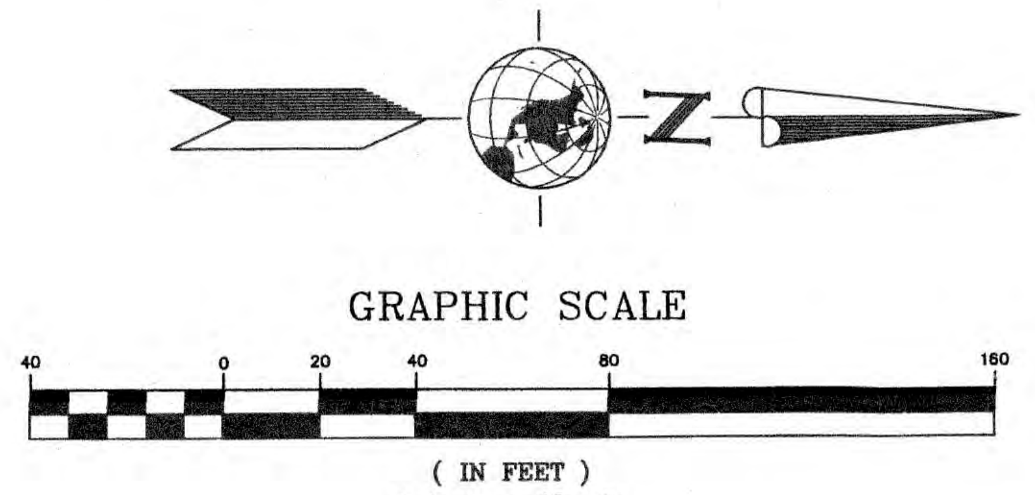
N
GRAPHIC SCALE
40
0
20
40
80
160
(IN FEET)
1 inch = 40 ft.

RECEIVED
MAR 0 1 2009

REGISTERED PROFESSIONAL ENGINEER
12,820
Thomas J. Sisul
EXP. 6/30/08
OREGON
Feb. 14, 1985
THOMAS J. SISUL
3-5-08

REVISIONS	BY
REDLINES 3/04/08	MM

Scappoose Industrial Building

Hedges Creek Management #1, LLC

Site and Storm Drain Plan

SISUL ENGINEERING
375 PORTLAND AVENUE
GLADSTONE, OREGON 97027
(503) 657–0188
DRAWING: 07–088STORM.DWG

DATE FEB 2008
SCALE 1"=40'
DRAWN MM
JOB SGL 07-088
SHEET CE1
OF 3 SHEETS

REVISIONS	BY
REDLINES 3/04/08	MM

NOTE:
CONCRETE TRUCKS BEING WASHED OUT ONSITE SHALL BE PARKED IN A LOCATION THAT WILL PREVENT ALL WASH WATER FROM ENTERING THE STORM DRAIN SYSTEM. CONCRETE REMNANTS AND RESIDUE SHALL BE PROPERLY DISPOSED OF. WASHOUT SUMP SHALL BE MINIMUM OF 2 CU.YDS. CARE SHOULD BE TAKEN NOT TO OVER FILL. COVER WHEN SITE IS COMPLETE OR SUMP IS NO LONGER NEEDED.

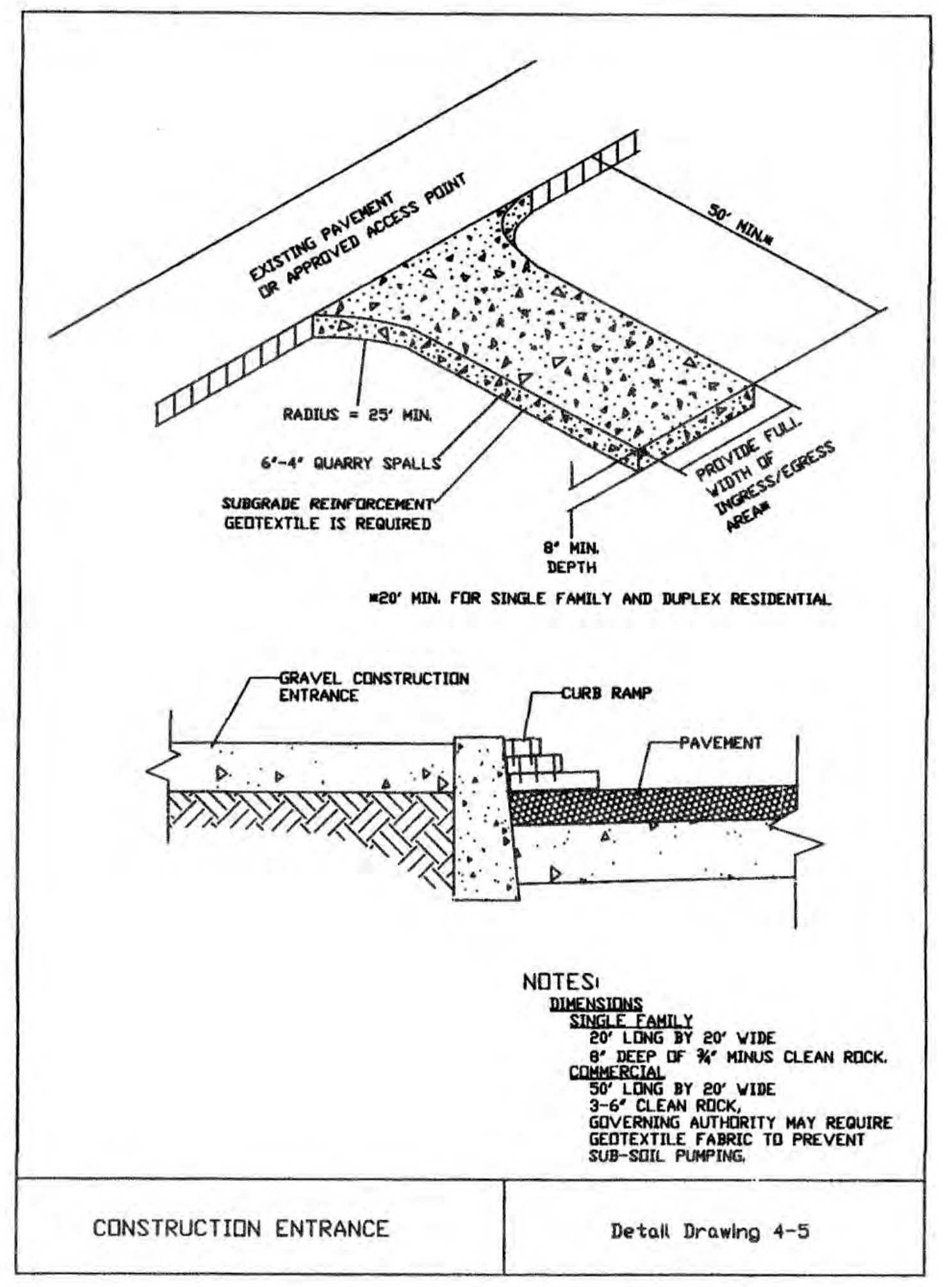
EXISTING PAVEMENT OR APPROVED ACCESS POINT
50' MIN.*
RADIUS = 25' MIN.
6"-4" QUARRY SPALLS
SUBGRADE REINFORCEMENT GEOTEXTILE IS REQUIRED
PROVIDE FULL WIDTH OF INGRESS/EGRESS AREA*
8" MIN. DEPTH
*20' MIN. FOR SINGLE FAMILY AND DUPLEX RESIDENTIAL
GRAVEL CONSTRUCTION ENTRANCE
CURB RAMP
PAVEMENT

NOTES:
DIMENSIONS
SINGLE FAMILY
20' LONG BY 20' WIDE
8" DEEP OF ¾" MINUS CLEAN ROCK.
COMMERCIAL
50' LONG BY 20' WIDE
3-6" CLEAN ROCK,
GOVERNING AUTHORITY MAY REQUIRE GEOTEXTILE FABRIC TO PREVENT SUB-SOIL PUMPING.

CONSTRUCTION ENTRANCE | Detail Drawing 4-5

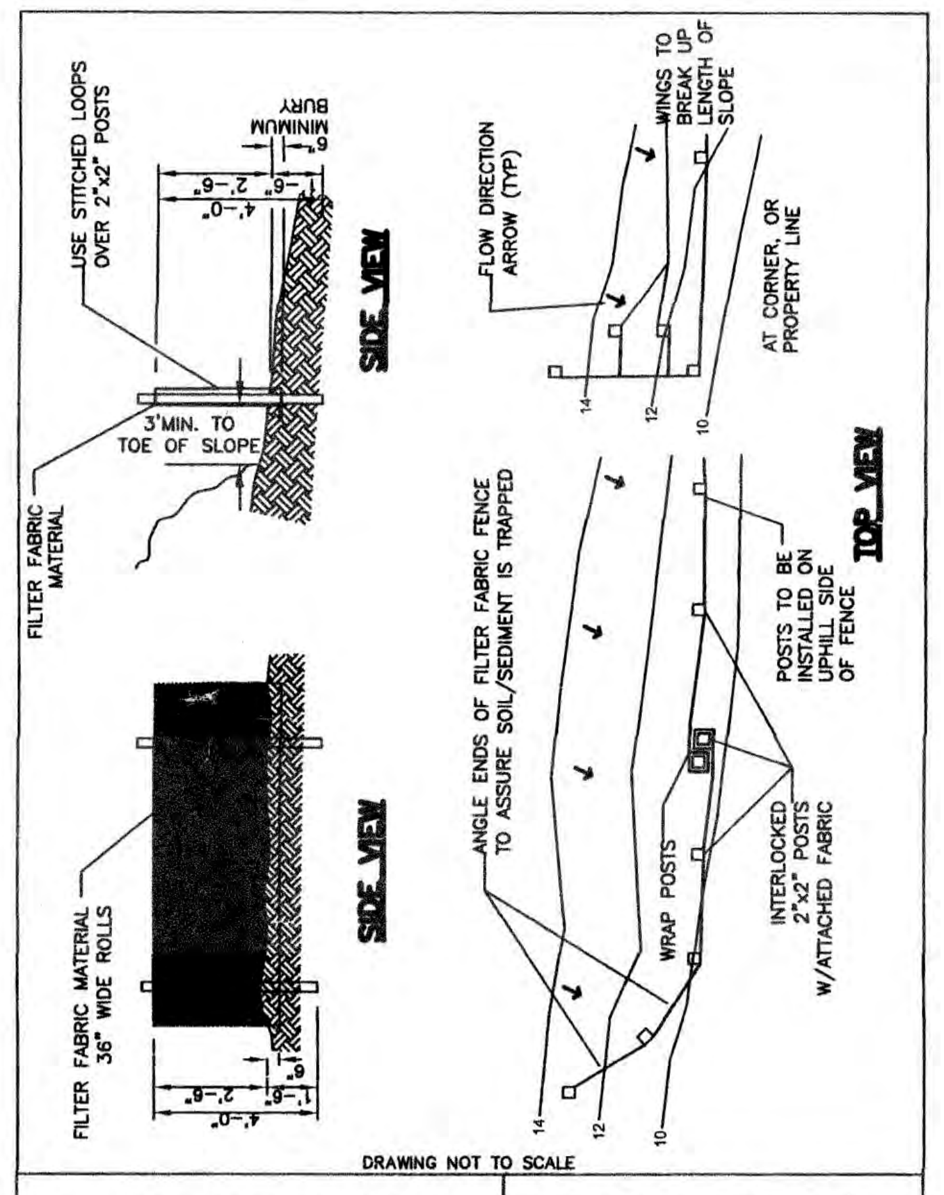
USE STITCHED LOOPS OVER 2"x2" POSTS
6" MINIMUM BURY
4'-0"
2'-6"
1'-6"
FILTER FABRIC MATERIAL
3'MIN. TO TOE OF SLOPE
SIDE VIEW
FLOW DIRECTION ARROW (TYP)
WINGS TO BREAK UP LENGTH OF SLOPE
AT CORNER, OR PROPERTY LINE
TOP VIEW
ANGLE ENDS OF FILTER FABRIC FENCE TO ASSURE SOIL/SEDIMENT IS TRAPPED
POSTS TO BE INSTALLED ON UPHILL SIDE OF FENCE
FILTER FABRIC MATERIAL 36" WIDE ROLLS
SIDE VIEW
WRAP POSTS
INTERLOCKED 2"x2" POSTS W/ATTACHED FABRIC
14
12
10

DRAWING NOT TO SCALE

EROSION CONTROL MANUAL | **TEMPORARY SEDIMENT FENCE** Detail Drawing 4.2A

FILE DRAFT\INSPECTORS GRAPHICS DRAWING PLOT 14

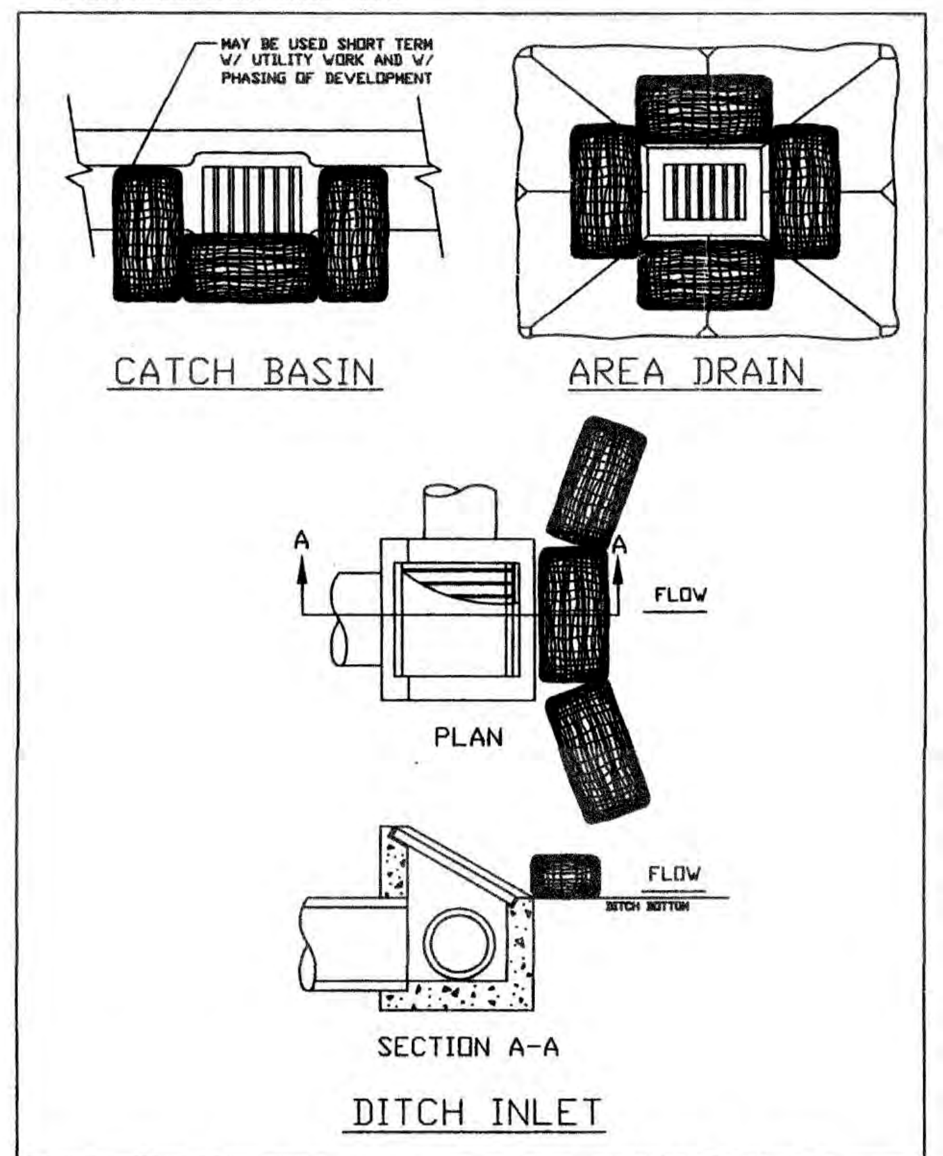
MAY BE USED SHORT TERM W/ UTILITY WORK AND W/ PHASING OF DEVELOPMENT
CATCH BASIN
AREA DRAIN
A
A
FLOW
PLAN
FLOW
DITCH BOTTOM
SECTION A-A
DITCH INLET

TECHNICAL GUIDANCE HANDBOOK | Biofilter Bags Temporary Detail Drawing 3-7D

FILE DRAFT\INSPECTORS GRAPHICS DRAWING BAG CB PLOT 14

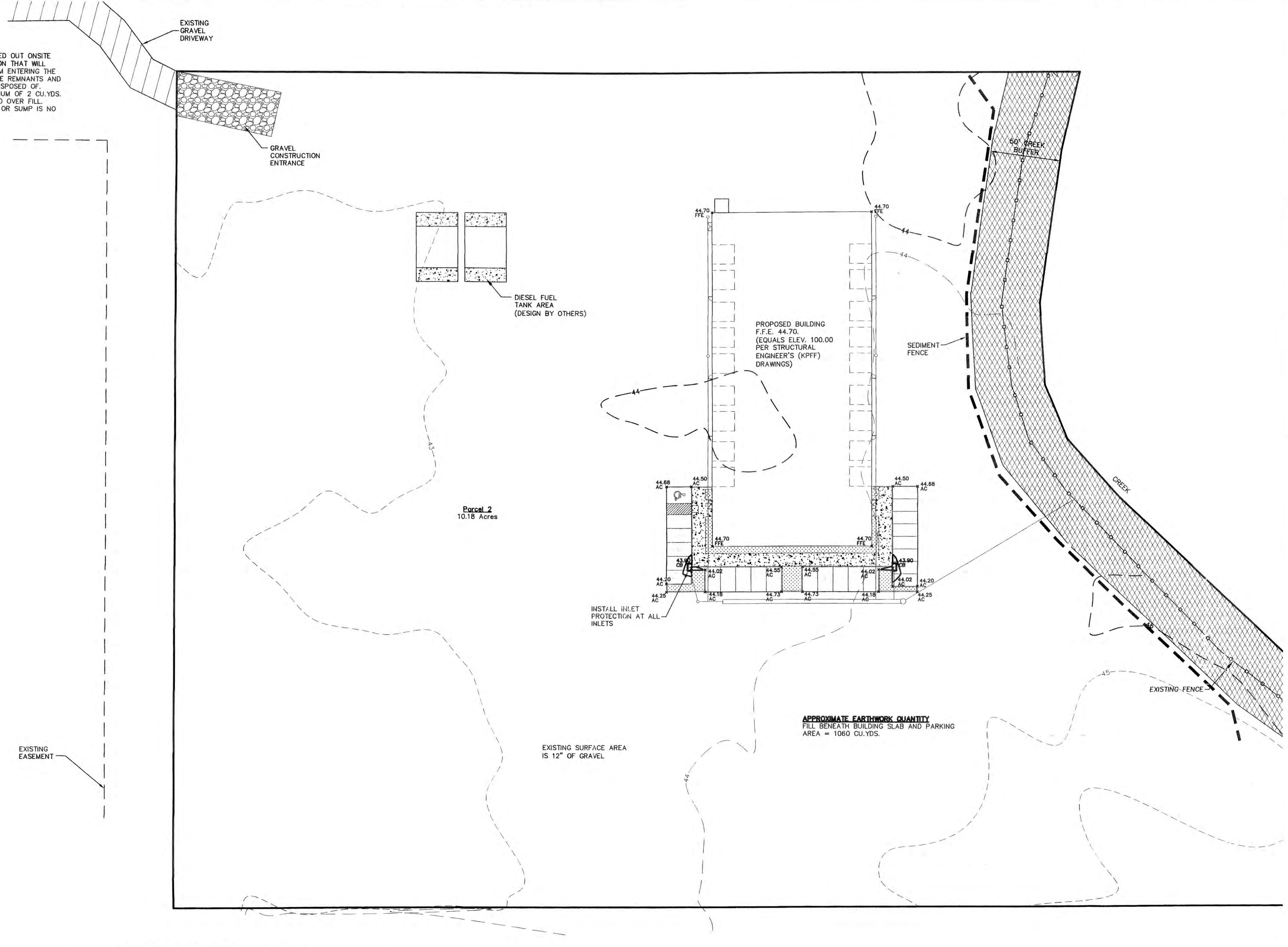
EXISTING GRAVEL DRIVEWAY
GRAVEL CONSTRUCTION ENTRANCE
DIESEL FUEL TANK AREA (DESIGN BY OTHERS)
50' CREEK BUFFER
44.70 FFE
44.70 FFE
44
PROPOSED BUILDING F.F.E. 44.70. (EQUALS ELEV. 100.00 PER STRUCTURAL ENGINEER'S (KPFF) DRAWINGS)
SEDIMENT FENCE
44
43
Parcel 2
10.18 Acres
44.68 AC
44.50 AC
44.50 AC
44.68 AC
44.70 FFE
44.70 FFE
43.90 CB
43.90 CB
44.02 AC
44.55 AC
44.55 AC
44.02 AC
44.02 AC
44.20 AC
44.20 AC
44.25 AC
44.25 AC
44.18 AC
44.73 AC
44.73 AC
44.18 AC
INSTALL INLET PROTECTION AT ALL INLETS
CREEK
45
EXISTING FENCE
EXISTING EASEMENT
EXISTING SURFACE AREA IS 12" OF GRAVEL
44

APPROXIMATE EARTHWORK QUANTITY
FILL BENEATH BUILDING SLAB AND PARKING AREA = 1060 CU.YDS.

Sediment Fence:
1. The filter fabric shall be purchased in a continuous roll cut to the length of the barrier to avoid use of joints. When joints are necessary, filter cloth shall be spliced together only at a support post, with a minimum 8 inch overlap, and both ends securely fastened to the post.
2. The filter fabric fence shall be installed to follow the contours, where feasible. Then fence posts shall be spaced a maximum of six feet apart and driven securely into the ground a minimum of 18 inches.
3. A trench shall be excavated, roughly 6 inches wide by 6 inches deep, upslope and adjacent to the wood post to allow the filter fabric to be buried. Bury the bottom of the fabric 6" vertically below finished grade. All areas of filter fabric trench shall be compacted.
4. The filter fabric shall be installed with stitched loops over fence posts. The fence post shall be constructed of 2" x 2" fir, pine, or steel. The fence post must be a minimum of 48" long. The filter fabric shall not be stapled or attached to existing trees.
5. Sediment fences shall be removed when they have served their useful purpose, but not before the upslope area has been permanently stabilized.
6. Sediment fences shall be inspected by applicant/contractor immediately after each rainfall, and at least daily during prolonged rainfall. Any required repairs shall be made immediately.

Erosion and Sediment Control Inspection Requirements:
1. All sites 1 acre and greater shall have a person with knowledge and experience in construction storm water controls and management practices conduct all inspections. The inspector shall keep a written record of each inspection.
2. Active Sites: Frequency of inspections shall be daily during storm water runoff or snowmelt runoff and at least once every seven (7) calendar days and within 24 hours after any storm event of greater than 0.5 inches of rain per 24-hour period.
3. Inactive Sites: During inactive periods of greater than seven (7) consecutive calendar days, inspections shall only be required once every two (2) weeks. Prior to discontinuing activities at the site, any exposed area shall be stabilized to prevent erosion. Stabilization may occur by applying appropriate cover (mulch, erosion control blanket, soil tackifier, etc.) or establishing adequate vegetative cover.

Erosion and Sediment Control Requirements:
1. The intent of the requirement is to prevent siltation from reaching storm drain systems and drainage ways. The erosion and sediment control (ESC) facilities shown on this plan are the minimum requirements for anticipated site conditions. During the construction period, these ESC facilities shall be upgraded as needed for unexpected storm events and to ensure that sediment laden water does not leave the site.
2. The following controls and practices are required:
   a) Each site shall have graveled or paved entrances, exits and parking areas, prior to beginning any other work, to reduce the tracking of sediment onto public or private roads.
   b) All unpaved roads located on-site shall be graveled. Other effective erosion and sediment control measures either on the road or down gradient may be used in place of graveling.
   c) When trucking saturated soils from the site, either water-tight trucks shall be used or loads shall be drained on-site until dripping has been reduced to minimize spillage on roads.
   d) Concrete trucks being washed out onsite shall be parked in a location that will prevent all wash water from entering the storm drain system without proper filtration. Concrete remnants and residue shall be properly disposed of.
3. Additional controls and practices shall be developed that are appropriate for the site. At a minimum the following shall be considered:
   a) Whenever practicable, clearing and grading shall be done in a phased manner to prevent exposed inactive areas from becoming a source of erosion.
   b) In developing vegetative erosion control practices, at a minimum the following shall be considered; temporary seeding, permanent seeding, mulching, sod stabilization, vegetative buffer strips, and protection of trees with *protective construction fences.*
   c) The following shall be considered for the protection of exposed areas and the prevention of soil from being eroded by storm water; mulching with straw or other vegetation, use of erosion control blankets, and application of soil tackifiers.
   d) The following shall be considered for the diversion of flows from exposed soil, store flows to allow for sedimentation, filter flows, or otherwise reduce soil laden runoff; use of silt fences, earth dikes, brush barriers, drainage swales, check dams, subsurface drains, pipe slope drains, rock outlet protection, sediment traps, and temporary or permanent sedimentation basins. All temporary sediment control practices shall not be removed until permanent vegetation or other cover of exposed areas is established.
   e) The following shall be considered to prevent the stockpiles from becoming a source of erosion; diversion of uncontaminated flows around stockpiles, use of cover over stockpiles, and installation of silt fences around stockpiles.
4. The following maintenance activities shall be implemented:
   a) Significant amounts of sediment that leave the site shall be cleaned up within 24 hours and placed back on the site or properly disposed. Any in-stream clean up of sediment shall be performed according to Oregon Division of State Lands' required timeframe.
   b) Under no conditions shall sediment intentionally be washed into storm sewer or drainage way.
   c) *For a filter fence,* the trapped sediment shall be removed when it reaches one third of the above ground fence height.
   d) For catch basin protection, cleaning must occur when design capacity has been reduced by fifty percent.
   e) For a sediment basin, removal of trapped sediments shall occur when design capacity has been reduced by fifty percent.
   f) All erosion and sediment controls not in the direct path of work shall be installed before any land disturbance.
   g) If fertilizers are used to establish vegetation, the application rates shall follow manufacturer's guidelines and the application shall be done in such a way to *minimize nutrient-laden runoff to receiving waters.*
   h) If construction activities cease for thirty (30) days or more, the entire site must be stabilized, using vegetation of a heavy mulch layer, temporary seeding, or another method that does not require germination to control erosion.
   i) Any use of toxic or other hazardous materials shall include proper storage, application, and disposal.
   j) The permittee shall manage abandoned hazardous wastes, used oils, contaminated soils or other toxic substances discovered during construction activities in a manner approved by the Department of Environmental Quality.
5. Wet weather bmps: construction activities must avoid or minimize excavation and creation of bare ground on slopes greater than five (5) percent from October 1 through May 31 each year.
6. Wet weather bmps: temporary stabilization of the site must be installed at the end of the shift before a holiday or weekend or at the end of each workday if rainfall is forecast in the next 24 hours and each weekend and holiday.

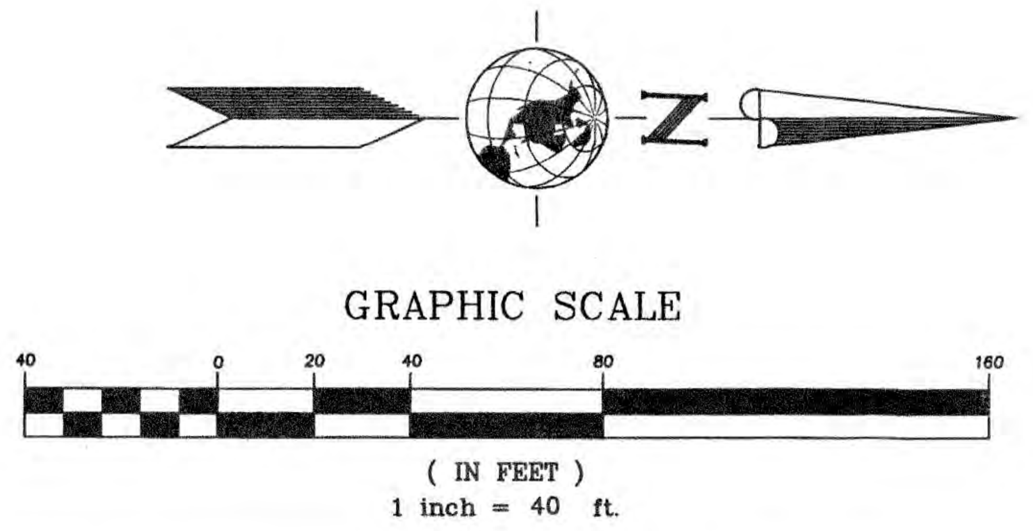
N
GRAPHIC SCALE
40
0
20
40
80
160
(IN FEET)
1 inch = 40 ft.

THOMAS J. SISUL
OREGON
FEB. 14, 1985
3-5-08

Scappoose Industrial Building

Hedges Creek Management #1, LLC

Grading and Erosion Control Plan

SISUL ENGINEERING
375 PORTLAND AVENUE
GLADSTONE, OREGON 97027
(503) 657-0188
DRAWING: 07-088GRD.DWG

DATE	FEB 2008
SCALE	1"=40'
DRAWN	MM
JOB	SGL 07-088
SHEET	CE2
OF 3	SHEETS

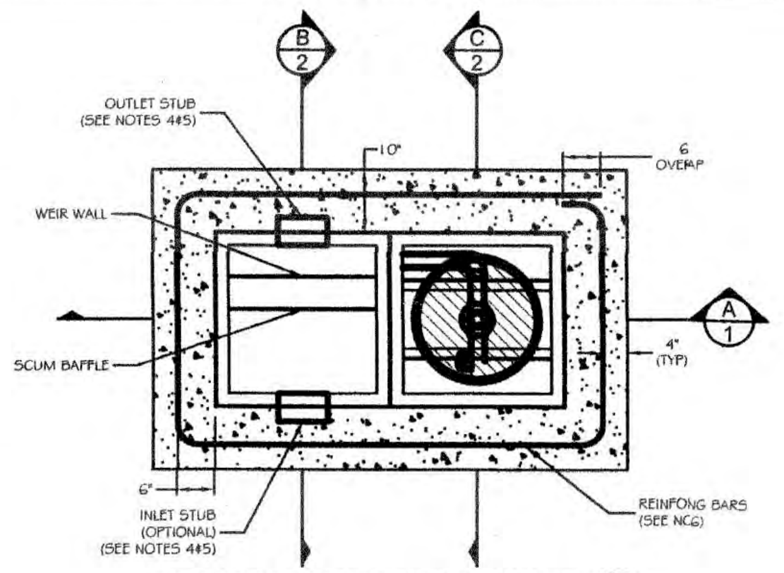
B
2
C
2
OUTLET STUB
(SEE NOTES 4&5)
10"
6
OVERLAP
WEIR WALL
A
1
4"
(TYP)
SCUM BAFFLE
6"
INLET STUB
(OPTIONAL)
(SEE NOTES 4&5)
REINFORCING BARS
(SEE NO6)

1-CARTRIDGE CATCHBASIN - PLAN VIEW (1/1)

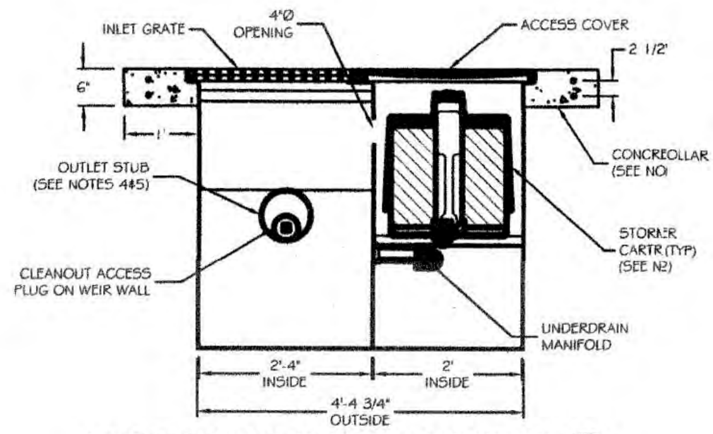
INLET GRATE
4"Ø
OPENING
ACCESS COVER
2 1/2"
6"
1'
OUTLET STUB
(SEE NOTES 4&5)
CONCRETE COLLAR
(SEE NO
CLEANOUT ACCESS
PLUG ON WEIR WALL
STORMFILTER
CARTRIDGE (TYP)
(SEE N2)
UNDERDRAIN
MANIFOLD
2'-4"
INSIDE
2'
INSIDE
4'-4 3/4"
OUTSIDE

1-CARTRIDGE CATCHBASIN - SECTION VIEW (A/1)

©2006 CONTECH Stormwater Solutions

CONTECH STORMWATER SOLUTIONS
contechstormwater.com

STEEL CATCHBASIN STORMFILTER
PLAN AND SECTION VIEWS
STANDARD DETAIL - 1 CARTRIDGE U

DRAWING 1 · 1/3

DATE: 11/01/05 · SCALE: NONE · FILE NAME: CBSF1-S-DTL · DRW · CHECKED: ARG

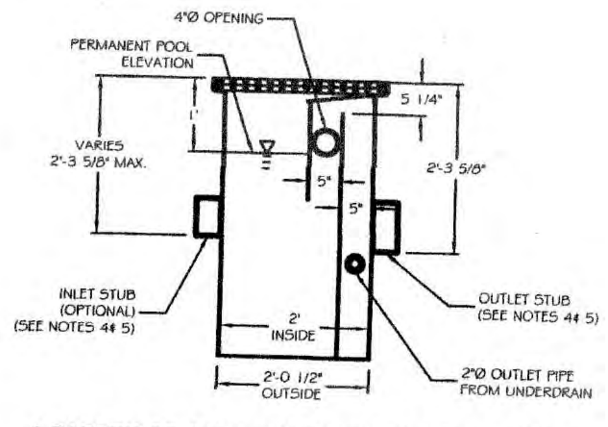
4"Ø OPENING
PERMANENT POOL
ELEVATION
1'
VARIES
2'-3 5/8" MAX.
5 1/4"
2'-3 5/8"
5"
5"
INLET STUB
(OPTIONAL)
(SEE NOTES 4& 5)
2'
INSIDE
OUTLET STUB
(SEE NOTES 4& 5)
2'-0 1/2"
OUTSIDE
2"Ø OUTLET PIPE
FROM UNDERDRAIN

1-CARTRIDGE CATCHBASIN - SECTION VIEW (B/2)

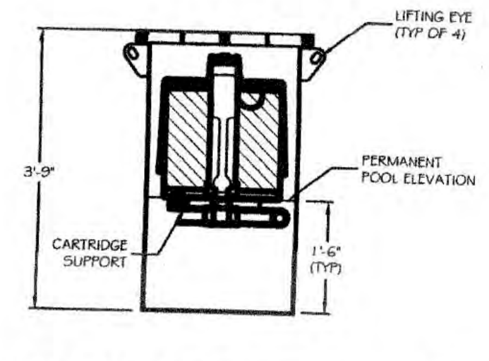
LIFTING EYE
(TYP OF 4)
3'-9"
PERMANENT
POOL ELEVATION
CARTRIDGE
SUPPORT
1'-6"
(TYP)

1-CARTRIDGE CATCHBASIN - SECTION VIEW (C/2)

©2006 CONTECH Stormwater Solutions

CONTECH STORMWATER SOLUTIONS
contechstormwater.com

STEEL CATCHBASIN STORMFILTER
SECTION VIEWS
STANDARD DETAIL - 1 CARTRIDGE UNIT

DRAWING 2 · 2/3

DATE: 11/01/05 · SCALE: NONE · FILE NAME: CBSF1-S-DTL · DRAWN: MJW · CHECKED: ARG

GENERAL NOTES

1) STORMFILTER BY CONTECH STORMWATER SOLUTIONS; PORTLAND, OR (800) 548-4667; SCARBOROUGH, ME (877) 907-8676; ELKRIDGE, MD (866) 740-3318.
2) FILTERS TO BE SIPHON-ACTUATED AND SELF-CLEANING.
3) STEEL STRUCTURE TO BE MANUFACTURED OF 1/4 INCH STEEL PLATE.
4) STORMFILTER REQUIRES 2.3 FEET OF DROP FROM RIM TO OUTLET. INLET SHOULD NOT BE LOWER THAN OUTLET. INLET (IF APPLICABLE) AND OUTLET PIPING TO BE SPECIFIED BY ENGINEER AND PROVIDED BY CONTRACTOR.
5) CBSF EQUIPPED WITH 4 INCH (APPROXIMATE) LONG STUBS FOR INLET (IF APPLICABLE) AND OUTLET PIPING. STANDARD OUTLET STUB IS 8 INCHES IN DIAMETER. MAXIMUM OUTLET STUB IS 15 INCHES IN DIAMETER. CONNECTION TO COLLECTION PIPING CAN BE MADE USING FLEXIBLE COUPLING BY CONTRACTOR.
6) FOR H-20 LOAD RATING, CONCRETE COLLAR IS REQUIRED. CONCRETE COLLAR WITH QUANTITY (2) #4 REINFORCING BARS TO BE PROVIDED BY CONTRACTOR.
7) ALL STORMFILTERS REQUIRE REGULAR MAINTENANCE. REFER TO OPERATION AND MAINTENANCE GUIDELINES FOR MORE INFORMATION.

1-CARTRIDGE CATCHBASIN
STORMFILTER DATA

STRUCTURE ID		
WATER QUALITY FLOW RATE (cfs)		0.02
PEAK FLOW RATE (< 1 cfs)		0.39
RETURN PERIOD OF PEAK FLOW (yrs)		100
CARTRIDGE FLOW RATE (15 OR 7.5 gpm)		15
MEDIA TYPE (CSF, PERLITE, ZPG)		CSF
RIM ELEVATION		43.90'
PIPE DATA:	I.E.	DIAMETER
INLET STUB	XXX.XX'	XX"
OUTLET STUB	41.60'	8"
CONFIGURATION OUTLET / INLET · OUTLET / INLET		
SLOPED LID		NO
SOLID COVER		NO
NOTES/SPECIAL REQUIREMENTS:		

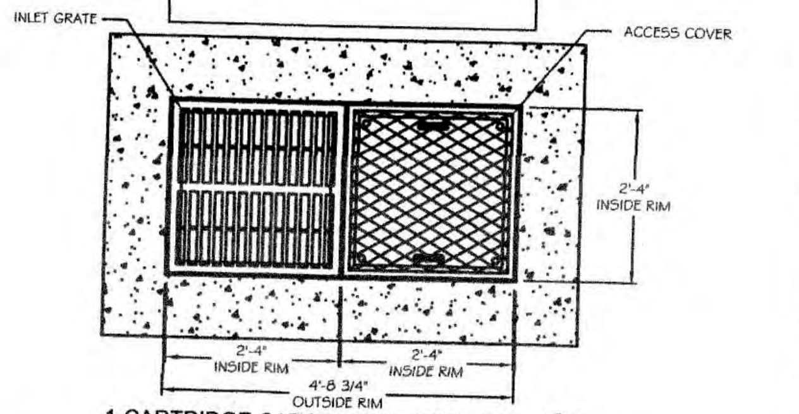
INLET GRATE
ACCESS COVER
2'-4"
INSIDE RIM
2'-4"
INSIDE RIM
2'-4"
INSIDE RIM
4'-8 3/4"
OUTSIDE RIM

1-CARTRIDGE CATCHBASIN - TOP VIEW (1/3)

©2006 CONTECH Stormwater Solutions

CONTECH STORMWATER SOLUTIONS
contechstormwater.com

STEEL CATCHBASIN STORMFILTER
TOP VIEW, NOTES AND DATA
STANDARD DETAIL - 1 CARTRIDGE UNIT

DRAWING 3 · 3/3

DATE: 11/01/05 · SCALE: NONE · FILE NAME: CBSF1-S-DTL · DRAWN: MJW · CHECKED: ARG

NOTE:
CLEANOUT INSTALLATIONS ARE LIMITED TO EASEMENT AREAS OR MAY BE ALLOWED ON A TEMPORARY BASIS IN RIGHT-OF-WAYS.

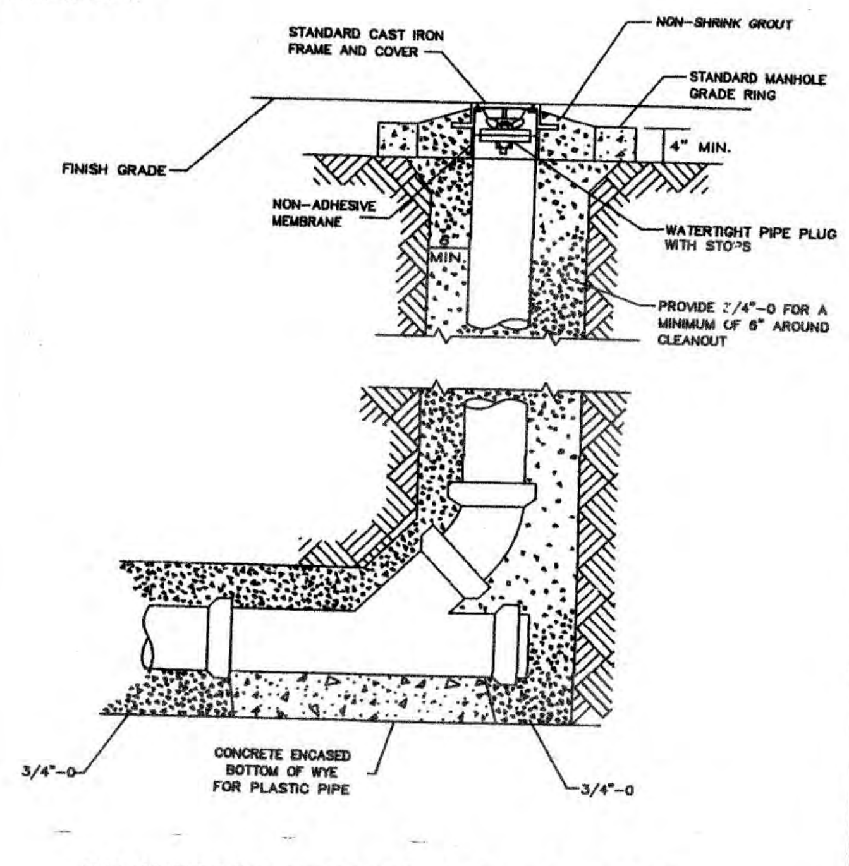
STANDARD CAST IRON
FRAME AND COVER
NON-SHRINK GROUT
STANDARD MANHOLE
GRADE RING
4" MIN.
FINISH GRADE
NON-ADHESIVE
MEMBRANE
6"
MIN.
WATERTIGHT PIPE PLUG
WITH STOPS
PROVIDE 3/4"-0 FOR A
MINIMUM OF 6" AROUND
CLEANOUT
3/4"-0
CONCRETE ENCASED
BOTTOM OF WYE
FOR PLASTIC PIPE
3/4"-0

NOTE: CONCRETE ENCASE ENTIRE WYE SECTION AND 45° BEND IF CONCRETE PIPE

STANDARD CLEAN OUT

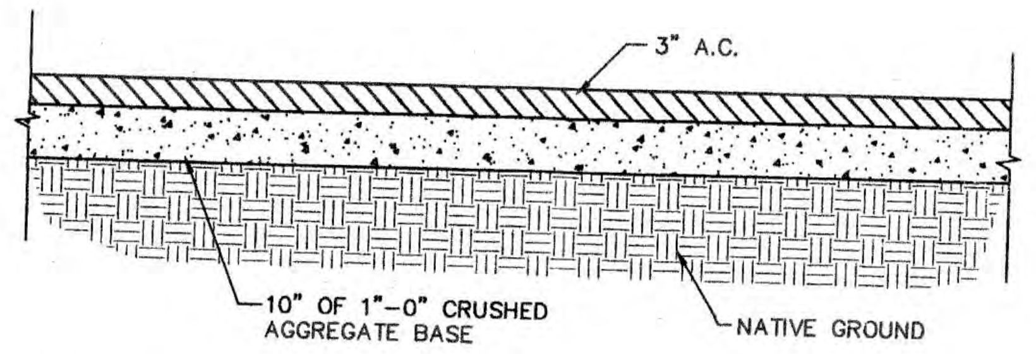
3" A.C.
10" OF 1"-0" CRUSHED
AGGREGATE BASE
NATIVE GROUND

TYPICAL PARKING LOT SECTION
N.T.S.

REVISIONS	BY
REDLINES 3/04/08	MM

Scappoose Industrial Building

Hedges Creek Management #1, LLC

Details

SISUL ENGINEERING
375 PORTLAND AVENUE
GLADSTONE, OREGON 97027
(503) 657-0188
DRAWING: 07-088DETAILS.DWG

DATE	FEB 2008
SCALE	1"=40'
DRAWN	MM
JOB	SGL 07-088
SHEET	CE3

OF 3 SHEETS

12,820
OREGON
Feb. 14, 1985
THOMAS J. SISUL

3-5-08